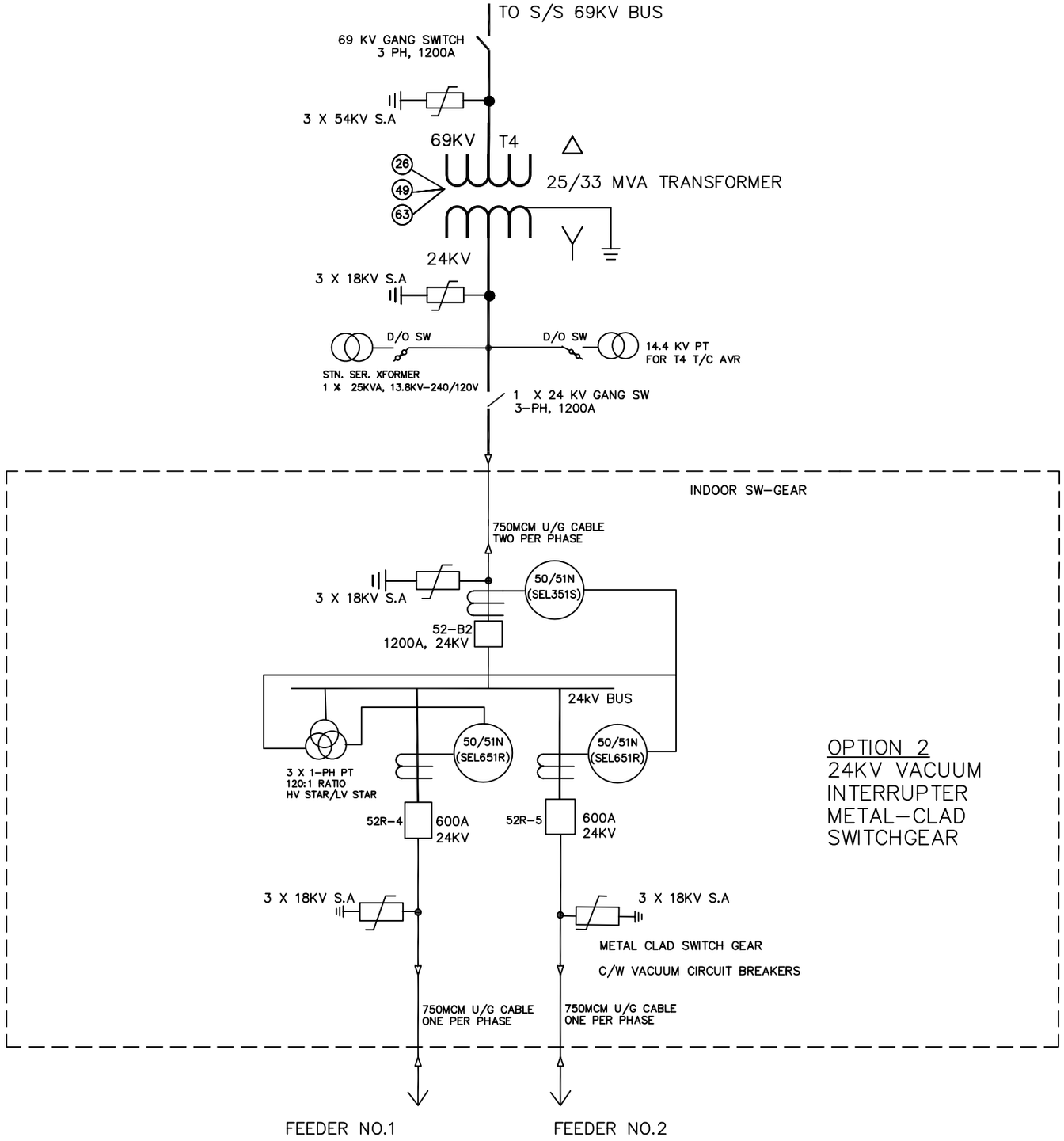

GENERAL NOTES

DEVICE LIST

DEVICE #	TYPE	QTY	DESCTRPTION	MFR	REMARKS

LEGEND

- FUSE
- LIGHTNING ARRESTER
- METAL CLAD SWITCHGEAR PULLOUT CIRCUIT BREAKER
- UNDERGROUND CABLE
- 69KV CIRCUIT BREAKER
- STN SER. TRANSFORMER
- POWER TRANSFORMER
- 24KV BUS PT

NO.	PARTICULARS	BY	APP.	DATE

REVISIONS

JAMAICA PUBLIC SERVICE CO. LTD.

KINGSTON JAMAICA

NEW SPUR TREE 138/69/24 KV SUBSTATION

INDOOR SWITCH-GEAR SINGLE LINE DIAGRAM

SCALE : NTS	DESIGNED BY:	DRAWING NO.
SUPERSEDES	DRAWN BY:	NST-SK02
DATED: AUG. 2021	APPROVED BY:	
	DATE: AUG. 2021	